12V to 24V 22A Boost Converter

https://uwarg-docs.atlassian.net/wiki/x/P4Btu

Calculated efficiency: ~96% (only power stage components considered), ~17W dissipated

Low side FETs dissipate ~1W each mainly through switching losses and are expected to heat up to ~80°C.

XT60 Input

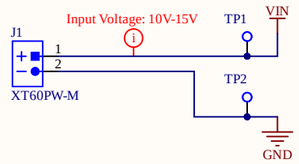

12V input from PSU

PSU protections: OCP, OVP, Short Circuit, Over Temperature, Input UnderVoltage

Controller 1

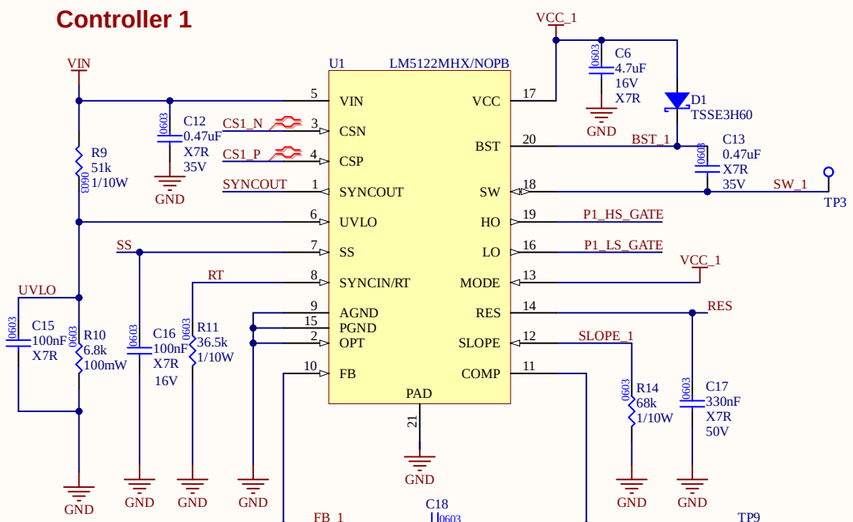

Test points for Bode100 loop stability measurements.

Controller 2

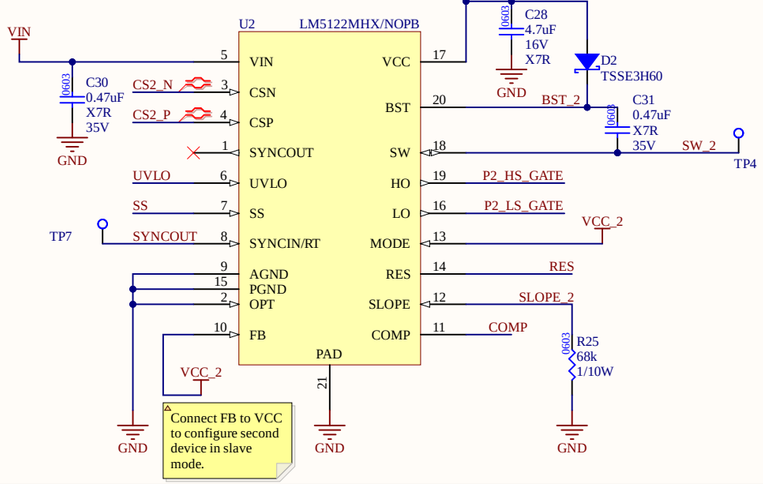

Connect FB to VCC to configure second device in slave mode.

Power Stage Phase 1

P1 Input & Current Sense

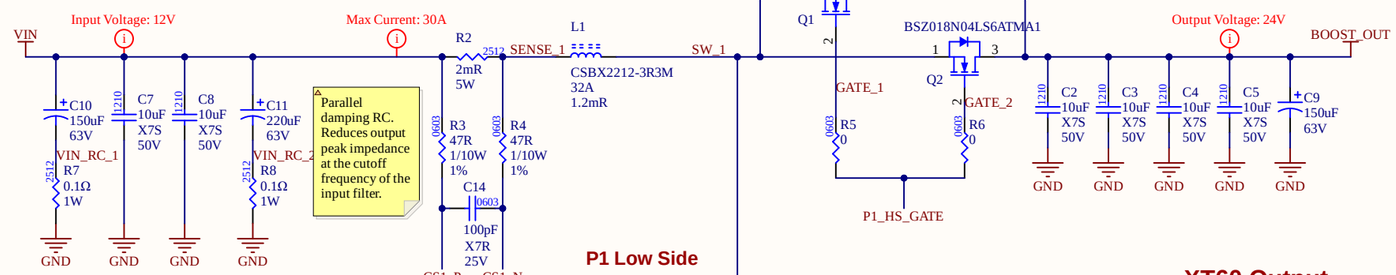

Parallel damping RC. Reduces output peak impedance at the cutoff frequency of the input filter.

Differential-mode current sense filter. Smooths out supply voltage spikes.

P1 High Side

RC snubbers to dampen gate ringing on high-side - Values TBD experimentally.

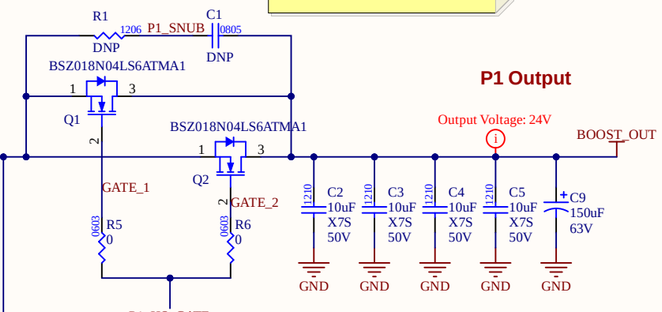

P1 Output

Output Voltage: 24V

BOOST_OUT

P1 Low Side

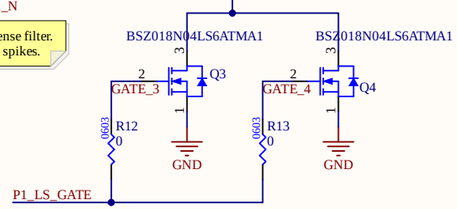

XT60 Output

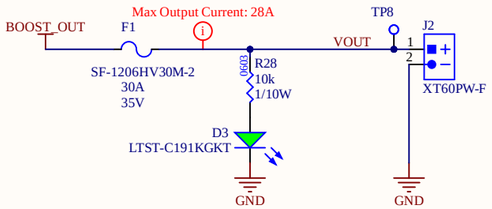

The boost controller's cycle-by-cycle current limit protects the power stage from overcurrent on a per-switching-cycle basis. A 30A fuse at the output gives protection against sustained overcurrent draw or short circuits.

Power Stage Phase 2

P2 Input & Current Sense

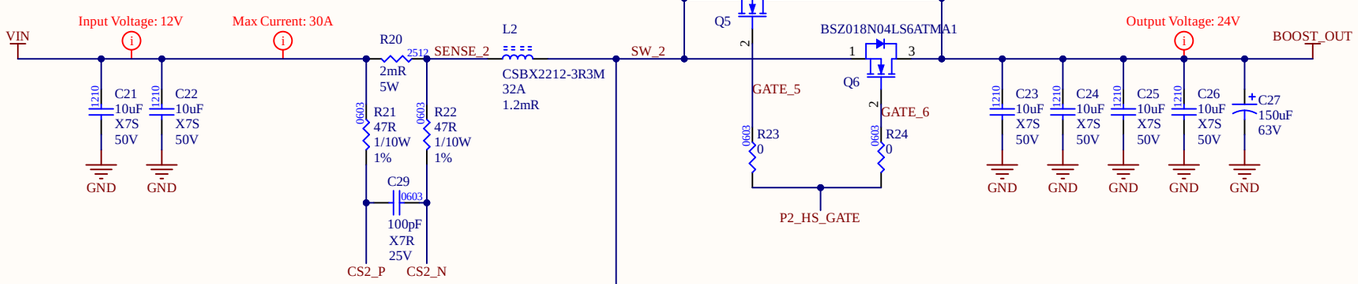

P2 High Side

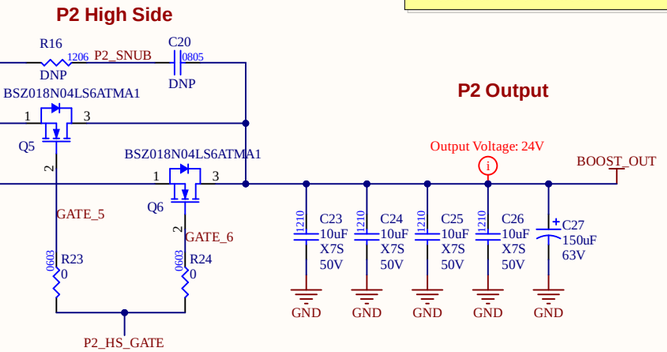

P2 Output

Output Voltage: 24V

BOOST_OUT

P2 Low Side

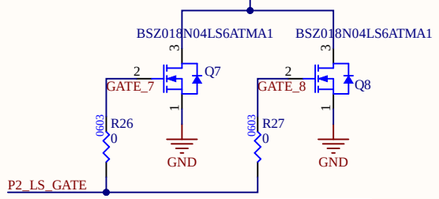

Series resistor to each FET gate for current sharing. Values TBD experimentally.

Mounting Holes

MH1 MH2 MH3 MH4

WARG
Waterloo Aerial Robotics Group
200 University Ave W
Waterloo, Ontario, Canada
N2L 3G1

PROJECT: 12-24V Boost Converter.PrjPcb, [No Variations]	REVISION: 1
DOCUMENT: 12-24V Boost Converter.SchDoc	MODIFIED: 2025-09-16
ENGINEER: Tim Gu, Daniel Rolinsky	REVIEWER: *
	SHEET 1 OF 1

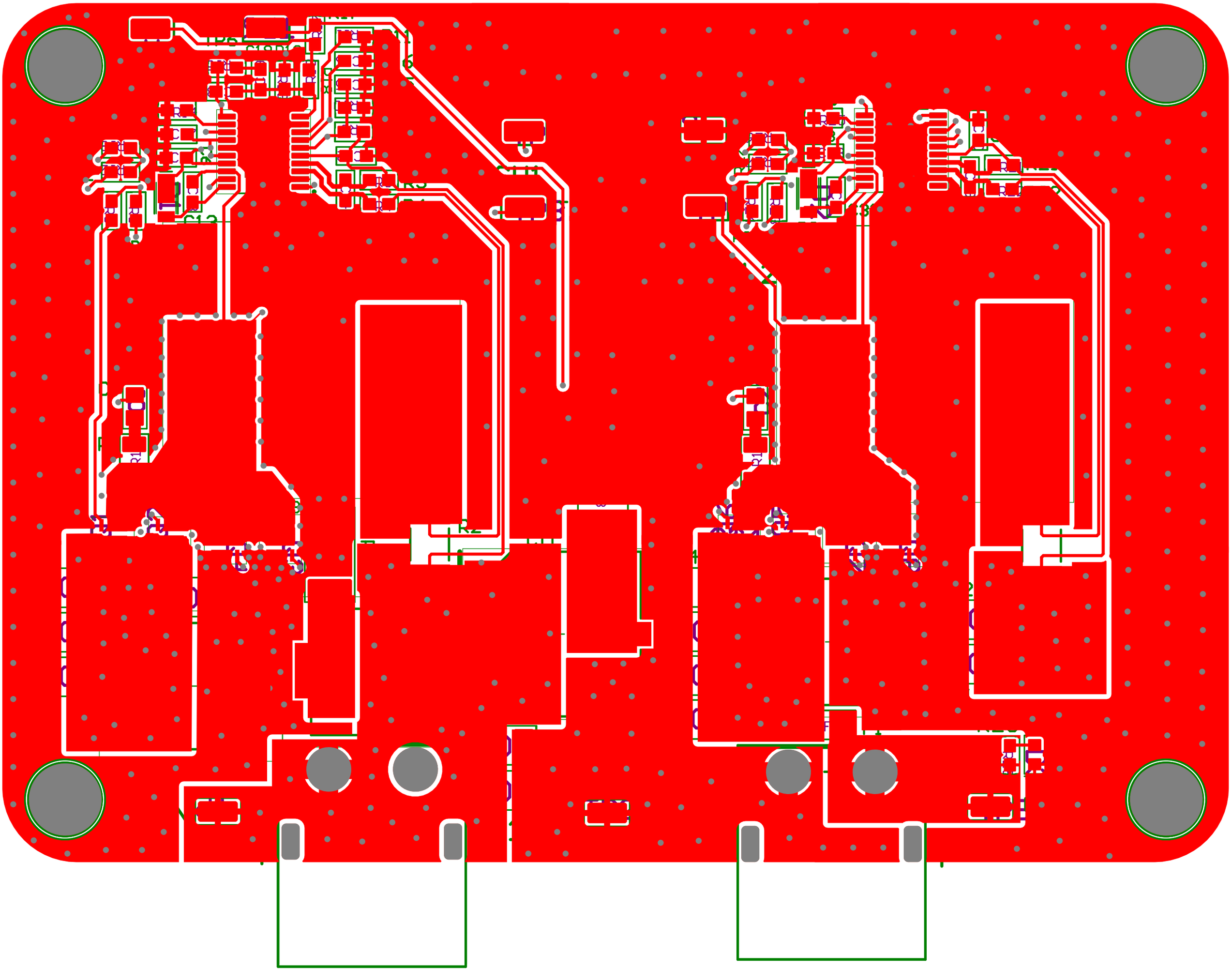

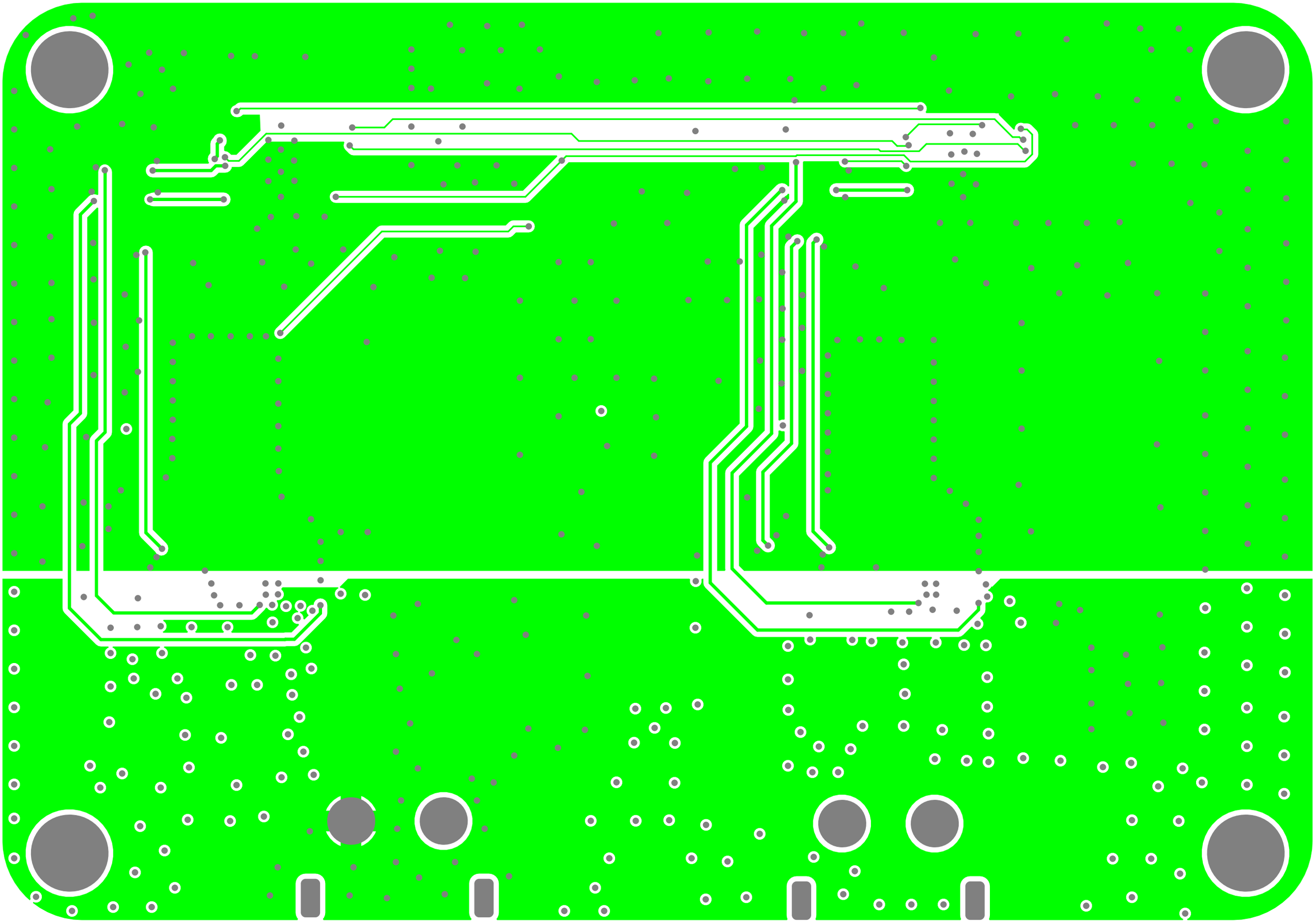

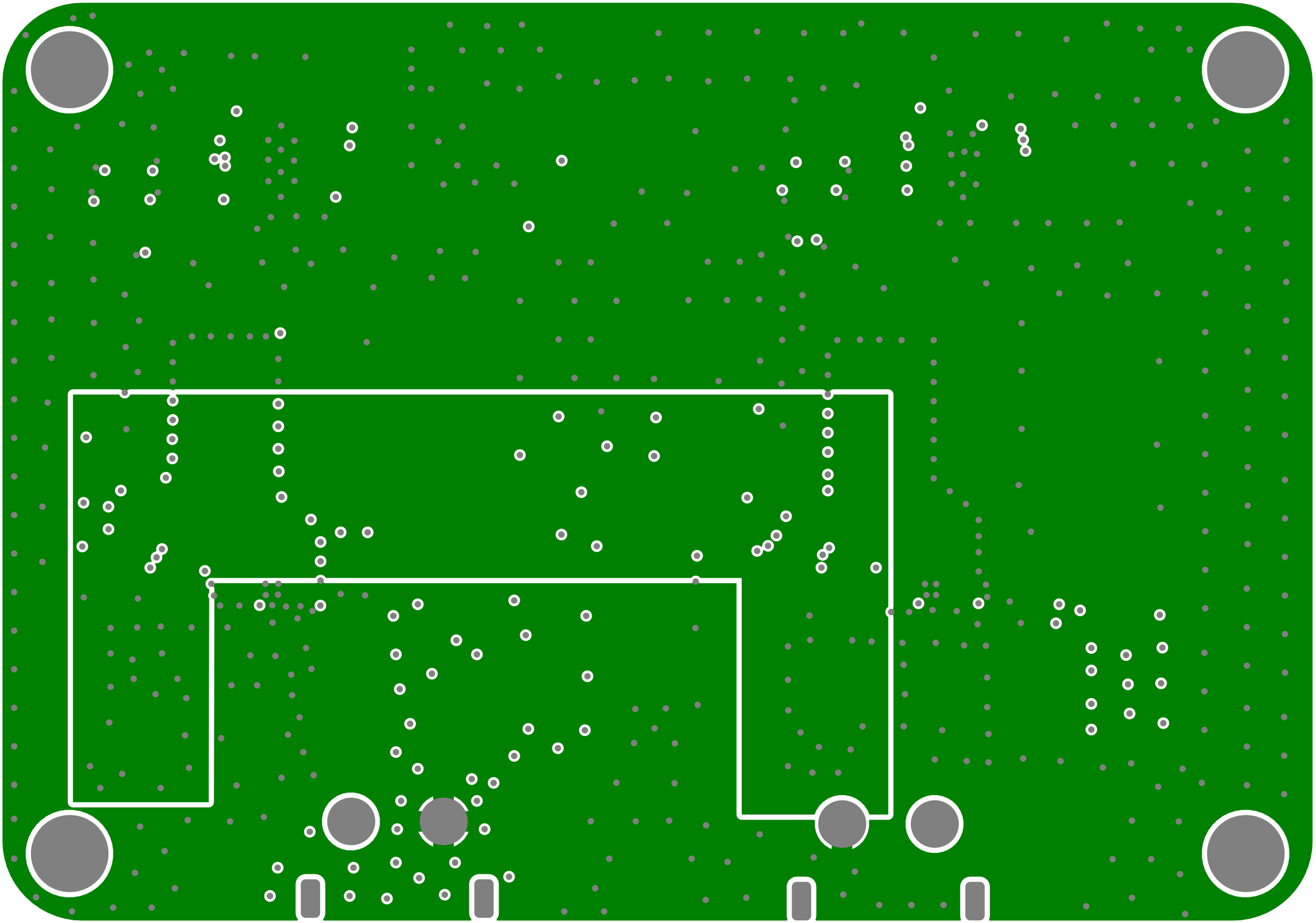

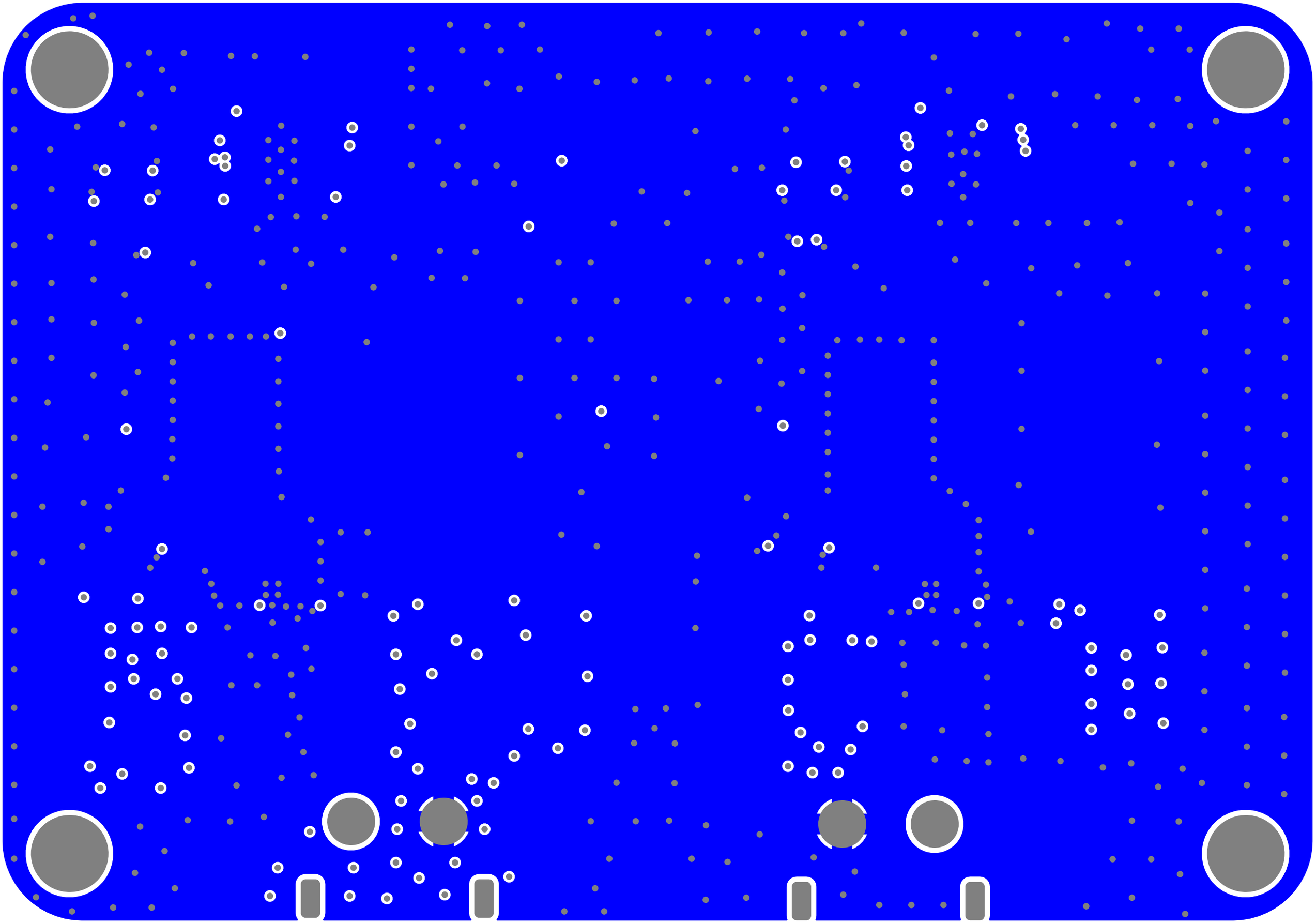

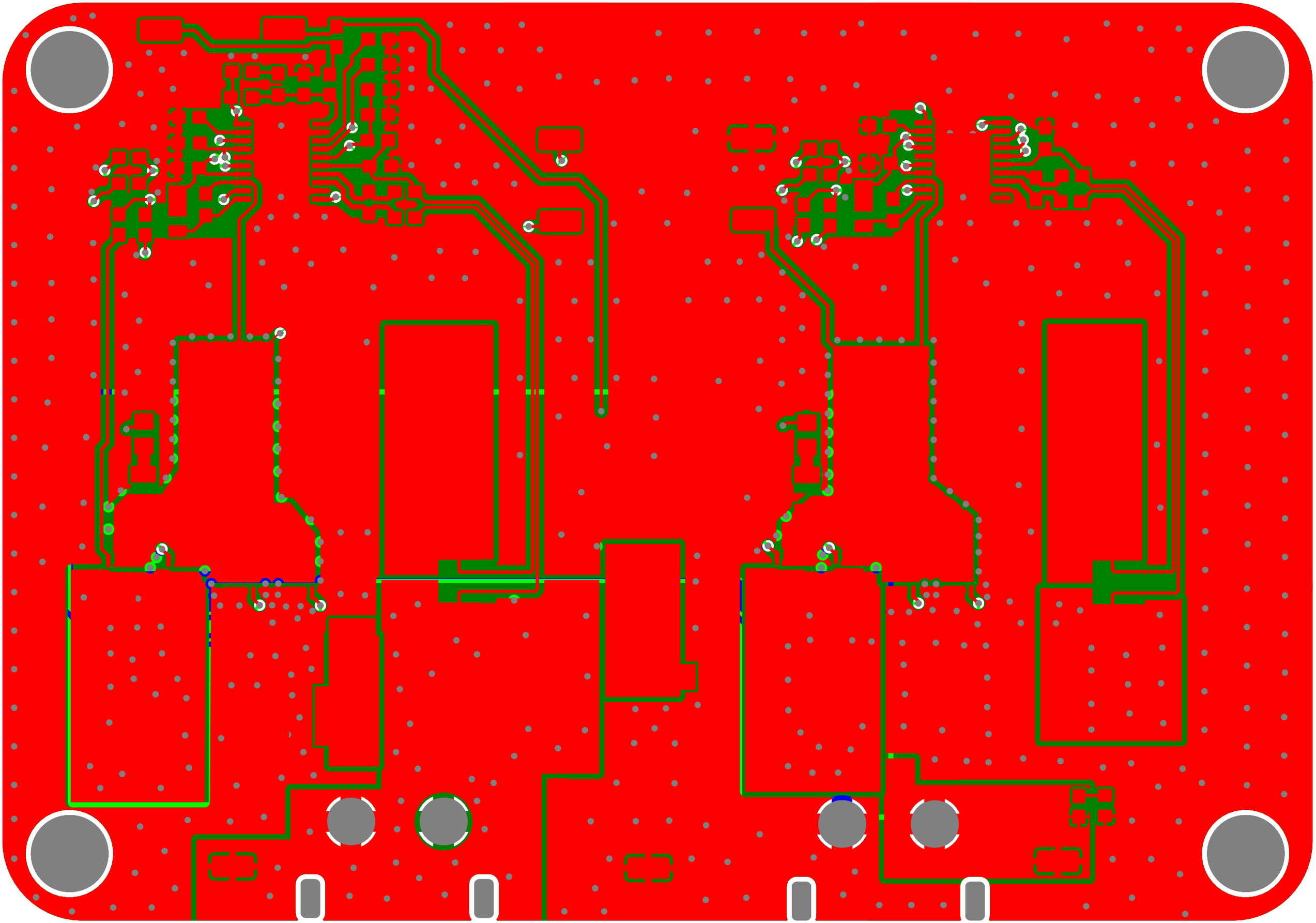

Line #	Name	Description	Designator	Revision ID	Revision State	Revision Status	Quantity	Manufacturer 1	Manufacturer Part Number 1	Manufacturer Lifecycle 1	Supplier 1	Supplier Part Number 1	Supplier Unit Price 1	Supplier Subtotal 1
	GRM188R7YA474KE05D	0.47 µF ±10% 35V Ceramic Capacitor X7R 0603 (1608 Metric)	C12, C13, C30, C31		Unknown server		4	Murata	GRM188R7YA474KE05D	Volume Production	Mouser	81-GRM188R7YA474KE5D	0.051	0.51
	XT60PW-F	Board Mount XT60PW-F 2 Pin Female Connector	J2		Unknown server		1							
	XT60PW-M	Board Mount XT60PW-M 2 Pin Male Connector	J1		Unknown server		1							
	LM5122MHX/NOPB	Boost Controller, Multiple Phase Capability, 1MHz Max Switching Freq, PDSO20	U1, U2		Unknown server		2	Texas Instruments	LM5122MHX/NOPB	Volume Production	DigiKey	296-43644-6-ND	4.9	9.8
	EEVFK1J221Q	CAP ALUM 220UF 20% 63V SMD	C11		Unknown server		1	Panasonic	EEVFK1J221Q	Volume Production	Newark	85AK4414	0.79	0.79
	GCM188R71H103KA37D	CAP CER 0.01UF 50V X7R 0603	C19		Unknown server		1	Murata	GCM188R71H103KA37D	Not Recommended for New Design	DigiKey	490-4778-1-ND	0.13	0.13
	GRM188Z71C475KE21J	CAP CER 4.7UF 16V X7R 0603	C6, C28		Unknown server		2	Murata	GRM188Z71C475KE21J	Volume Production	DigiKey	490-GRM188Z71C475KE21JCT-ND	0.24	0.48
	GCM32EC71H106KA03K	CAP CER 10UF 50V X7S 1210	C2, C3, C4, C5, C7, C8, C21, C22, C23, C24, C25, C26		Unknown server		12	Murata	GCM32EC71H106KA03K	Volume Production	Mouser	81-GCM32EC71H106KA3K	0.443	5.32
	GCM188R71C104KA37D	CAP CER 100nF 16V X7R 0603	C15, C16		Unknown server		2	Murata	GCM188R71C104KA37D	Not Recommended for New Design	DigiKey	490-4774-1-ND	0.18	0.36
	CC0603KRX7R8BB101	CAP CER 100PF 25V X7R 0603	C14, C29		Unknown server		2	Yageo Group	CC0603KRX7R8BB101	Volume Production	DigiKey	311-4078-1-ND	0.1	0.2
	GRM1885C1H101JA01D	CAP CER 100PF 50V C0G/NPO 0603	C18		Unknown server		1	Murata	GRM1885C1H101JA01D	Not Recommended for New Design	DigiKey	490-1427-1-ND	0.08	0.08
	A785MW157M1JLAV013	Cap, Alu Elec, Hybrid, 150UF, 63V, SMD Rohs Compliant: Yes	C9, C10, C27		Unknown server		3	KEMET	A785MW157M1JLAV013	Volume Production	Mouser	80-A785MW157M1JLAV13	2.39	7.17
	CGA3E3X7R1H334K080AB	Ceramic Capacitor, Multilayer, Ceramic, 50V, 10%+Tol, 10%-Tol, X7R, 15%TC, 0.33uF, Surface Mount, 0603	C17		Unknown server		1	TDK	CGA3E3X7R1H334K080AB	Volume Production	Newark	71AH2809	0.03	0.03
	.CAP_0805_DNP	DNP 0805 Capacitor	C1, C20		Unknown server		2							
	.RES_1206_DNP	DNP 1206 Resistor	R1, R16		Unknown server		2							
	WSLF25122L000FEA	Fixed Resistor, Metal Strip, 6W, 0.002ohm, 0.1095V, 1%+/-Tol, 70ppm/Cel, Surface Mount, 2512	R2, R20		Unknown server		2	Vishay	WSLF25122L000FEA	Volume Production	Newark	08AJ1733	0.335	0.67
	SF-1206HV30M-2	FUSE BOARD MOUNT 40A 35VDC 1206	F1		Unknown server		1	Bourns	SF-1206HV30M-2	Volume Production	Arrow Electronics	SF-1206HV30M-2	0.201	0.201
	LTST-C191KGKT	LED GREEN 2V 0603	D3		Unknown server		1	Lite-On	LTST-C191KGKT	Volume Production	DigiKey	160-1446-6-ND	0.15	0.15
	BSZ018N04LS6ATMA1	MOSFET N-CH 40V 27A/40A TSDSON	Q1, Q2, Q3, Q4, Q5, Q6, Q7, Q8		Unknown server		8	Infineon	BSZ018N04LS6ATMA1	Volume Production	DigiKey	448-BSZ018N04LS6ATMA1CT-ND	1.49	11.92
	RC0603JR-070RL	RES 0 OHM 1% 1/10W 0603	R5, R6, R12, R13, R23, R24, R26, R27		Unknown server		8	Yageo Group	RC0603JR-070RL	Volume Production	Mouser	603-RC0603JR-070RL	0.007	0.07
	WSL2512R1000FEA	RES 0.1 OHM 1% 1W 2512	R7, R8		Unknown server		2	Vishay	WSL2512R1000FEA	Volume Production	Newark	26R4261	0.46	0.92
	RC0603FR-072K67L	RES 2.67K OHM 1% 1/10W 0603	R19		Unknown server		1	Yageo Group	RC0603FR-072K67L	Volume Production	Newark	49AK1926	0.002	0.002
	RC0603FR-076K8L	RES 6.8k OHM ±1% 100mW 0603	R10		Unknown server		1							
	RC0603FR-0710RL	RES 10 OHM 1% 1/10W 0603	R17		Unknown server		1							
	RC0603FR-0710KL	RES 10K OHM 1% 1/10W 0603	R28		Unknown server		1	Yageo Group	RC0603FR-0710KL	Volume Production	DigiKey	311-10.0KHRCT-ND	0.1	0.1
	CRCW060336K0FKEAC	RES 36.5K OHM 1% 1/10W 0603	R11, R15		Unknown server		2	Vishay	CRCW060336K0FKEAC	Volume Production	Mouser	71-CRCW060336K0FKEAC	0.018	0.18
	ERJ-3EKF47R0V	RES 47 OHM 1% 1/10W 0603	R3, R4, R21, R22		Unknown server		4	Panasonic	ERJ-3EKF47R0V	Volume Production	Mouser	667-ERJ-3EKF47R0V	0.02	0.2
	RC0603FR-0751KL	RES 51K OHM 1% 1/10W 0603	R9, R18		Unknown server		2							
	AC0603FR-0768KL	RES 68K OHM 1% 1/10W 0603	R14, R25		Unknown server		2	Yageo Group	AC0603FR-0768KL	Volume Production	Arrow Electronics	AC0603FR-0768KL	0.005	0.05
	TS3E3H60	Schottky Diode 60 V 3A Surface Mount SOD-123H	D1, D2		Unknown server		2	Taiwan Semiconductor	TS3E3H60	Volume Production	Mouser	821-TS3E3H60	0.42	0.84
	CSBX2212-3R3M	SMD 32A 1.2mR POWER INDUCTOR	L1, L2		Unknown server		2	Codaca	CSBX2212-3R3M		DigiKey	4044-CSBX2212-3R3MCT-ND	5.35	10.7
	RCWCTE	SMT Test Point	TP1, TP2, TP3, TP4, TP5, TP6, TP7, TP8, TP9		Unknown server		9	KOA Speer	RCWCTE	Volume Production	DigiKey	2019-RCWCTECT-ND	0.109	1.09
	M3HOLE-STANDARD	Standard M3 Mounting hole as defined by mech team, see confluence for reasonning	MH1, MH2, MH3, MH4		Unknown server		4							